GLOVE BAGS

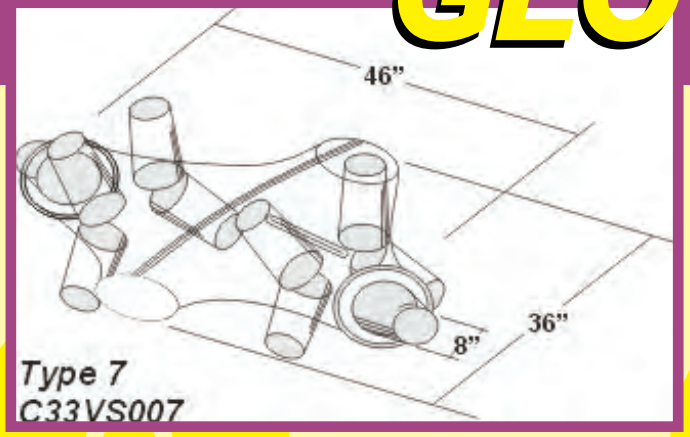

Type 7
C33VS007

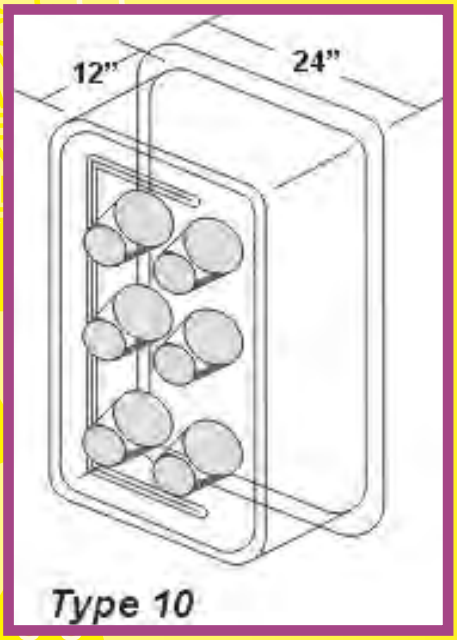

Type 10

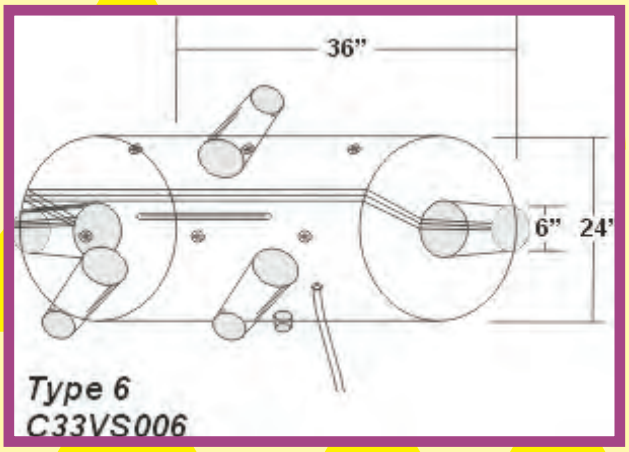

Type 6
C33VS006

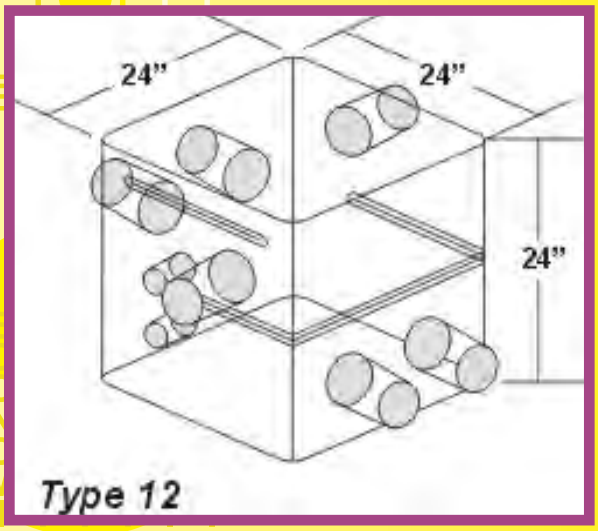

Type 12

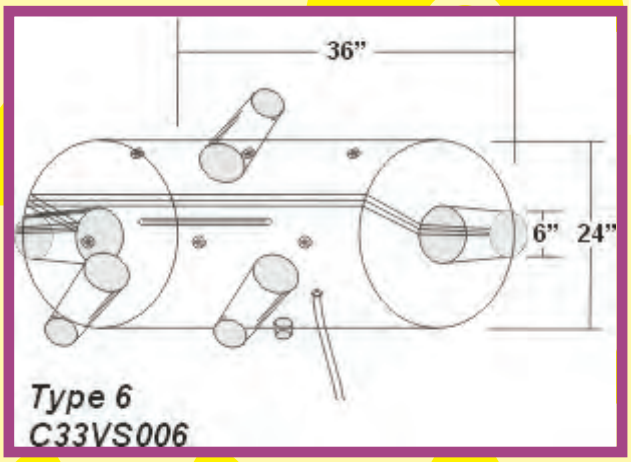

Type 6
C33VS006

CERTIFIED INCINERABLE

Following are illustrations of just a few glove bag types Frham manufactures. For more information, please contact our Sales/Customer Service department @ 615-254-0841 or by visiting www.frhamsafety.com

318 Hill Ave.
Nashville, TN 37210
(615) 254-0841
Fax: (615) 726-2514

171 Grayson Road
Rock Hill, SC 29732
(803) 366-5131
Fax: (803) 366-2005

FRHAM